Edexcel A Level Physics

Your notes

Electromagnetic Induction & Alternating Currents

Contents

- Induced E.M.F in a Moving Coil
- Induced E.M.F between Linked Coils
- Lenz's Law
- Faraday's Law
- Alternating Currents & Potential Differences
- Root-Mean-Square Current & Potential Difference

© 2026 Save My Exams, Ltd.

Your notes

Induced E.M.F in a Moving Coil

- Electromagnetic induction is a phenomenon which occurs when an e.m.f is induced when a conductor moves through a magnetic field
- If there is a change in **magnetic flux** Φ or magnetic flux linkage $N\Phi$
  - **Mechanical work** (from moving the conductor in the field) is transformed into **electrical energy**
- Therefore, if attached to a complete circuit, a current will be induced in the conductor
- This is known as **electromagnetic induction** and is defined as:

  The process in which an e.m.f is induced in a closed circuit due to changes in magnetic flux (linkage)
- This can occur either when:
  - A conductor cuts through a **magnetic field**
  - The magnetic flux (linkage) through a coil changes, e.g. becomes more or less dense, or changes direction
- Electromagnetic induction is used in:
  - Electrical **generators** which convert mechanical energy to electrical energy
  - **Transformers** which are used in electrical power transmission
- This phenomenon can easily be demonstrated with a magnet and a coil, or a wire and two magnets

Relative Motion between a Coil and a Magnet

- When a coil is connected to a sensitive voltmeter, a bar magnet can be moved in and out of the coil to induce an e.m.f in the coil

© 2026 Save My Exams, Ltd.

Your notes

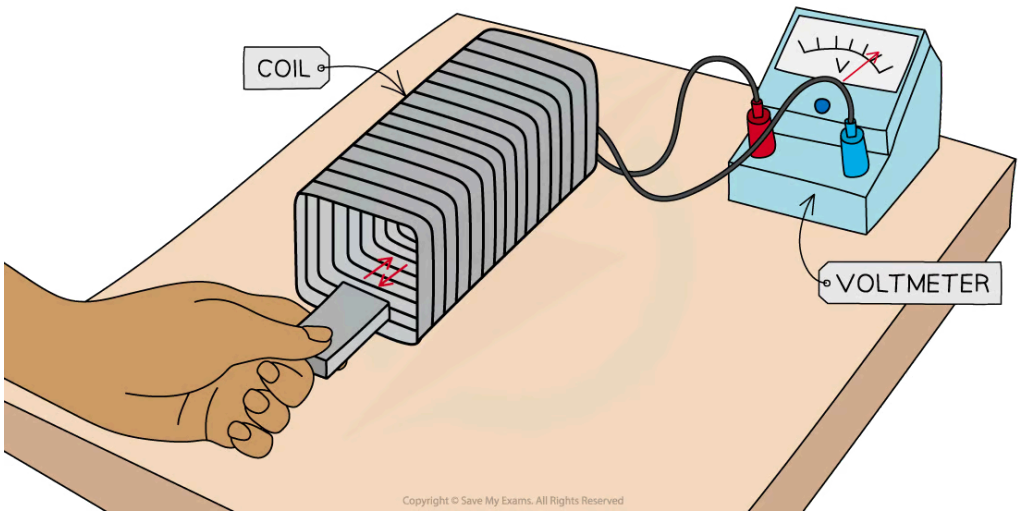

A bar magnet is moved through a coil connected to a voltmeter to induce an e.m.f

The observations are:

- When the bar magnet is **not moving**, the voltmeter shows a **zero reading**
  - When the bar magnet is held still inside, or outside, the coil, the rate of change of flux is zero, so, there is **no e.m.f induced**
- When the bar magnet begins to move inside the coil, there is a reading on the voltmeter
  - As the bar magnet moves, its magnetic field lines 'cut through' the coil, generating a **change in magnetic flux** ($\Delta\Phi$)
  - This induces an **e.m.f** within the coil, shown momentarily by the reading on the voltmeter
- When the bar magnet is taken back out of the coil, an e.m.f is induced in the **opposite direction**
  - As the magnet changes direction, the direction of the current changes
  - The voltmeter will momentarily show a reading with the opposite sign
- Increasing the **speed** of the magnet induces an e.m.f with a **higher magnitude**
  - As the speed of the magnet increases, the rate of change of flux increases
- The direction of the electric current, and e.m.f, induced in the conductor is such that it **opposes** the change that produces it

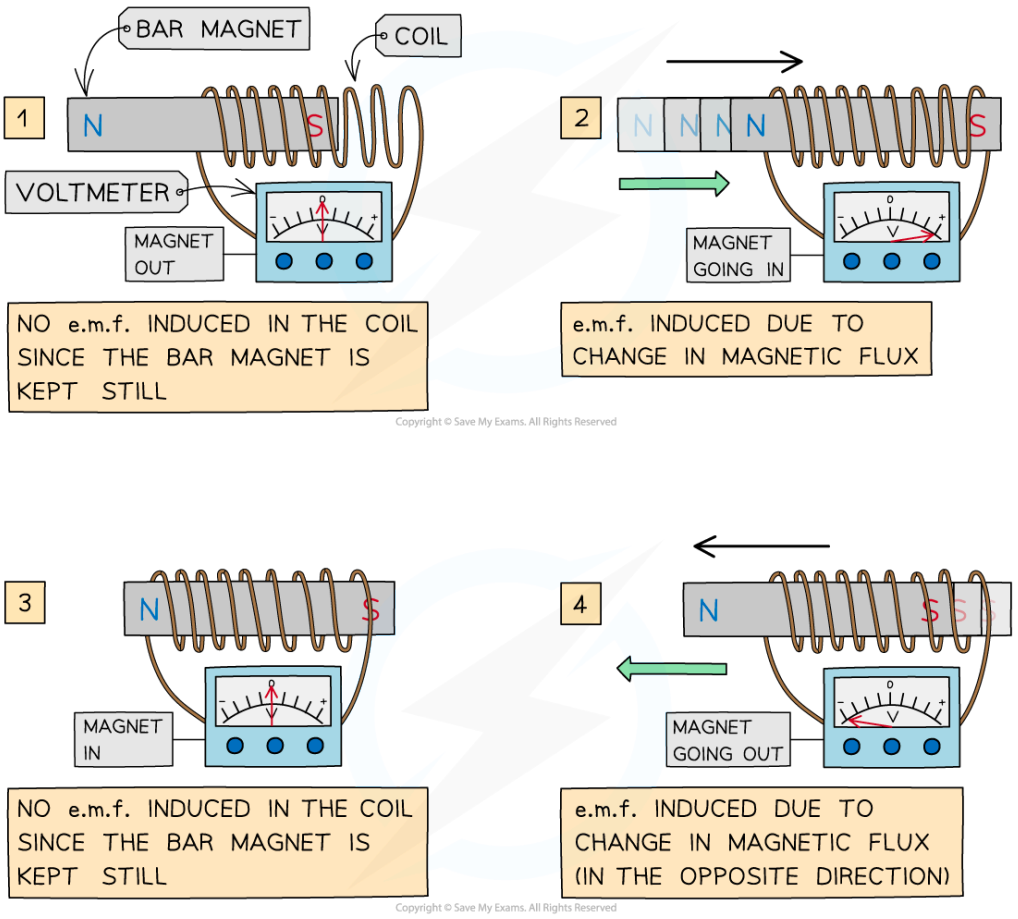

An e.m.f is induced only when the bar magnet is moving through the coil

- Factors that will increase the induced e.m.f are:
  - Moving the magnet **faster** through the coil
  - Adding more **turns** to the coil
  - Increasing the **strength** of the bar magnet

Rotating Coils

- When a coil rotates in a uniform magnetic field, the **magnetic flux** through the coil will vary as it rotates
- Therefore, since the flux linkage through the coil also varies, this will induce an e.m.f that also varies
  - The maximum e.m.f is when the coil **cuts through** the most field lines
  - The varying e.m.f induced is called an **alternating voltage**

Your notes

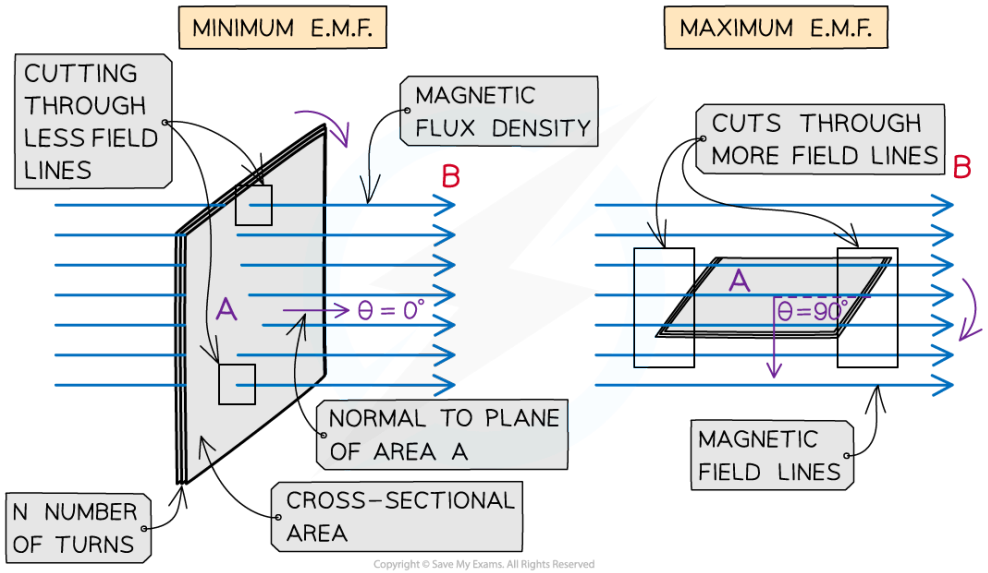

Your notes

Even though the flux linkage through the coil is maximum when θ = 0°, the change in flux linkage is minimal as the coil rotates, so the induced e.m.f is a minimum. The opposite is true when θ = 90°

- Increasing the coil's frequency of rotation increases:
  - The **frequency** of the alternating voltage
  - The **amplitude** of the alternating voltage

Your notes

Induced E.M.F between Linked Coils

- An e.m.f can be induced in a coil when there is a change of current in another coil linked with this coil
  - This is what happens in a **transformer**

Transformers

- A transformer is a device that works by the principles of electromagnetic induction
- It changes high alternating voltages at low current to low alternating voltage at high current, and vice versa
- A transformer is made up of:
  - A primary coil
  - A secondary coil
  - An iron core
- The primary and secondary coils are wound around the soft iron core
  - The soft iron core is necessary because it creates **flux linkage** between the primary and secondary coils
  - Soft iron is used because it can easily be magnetised and demagnetised

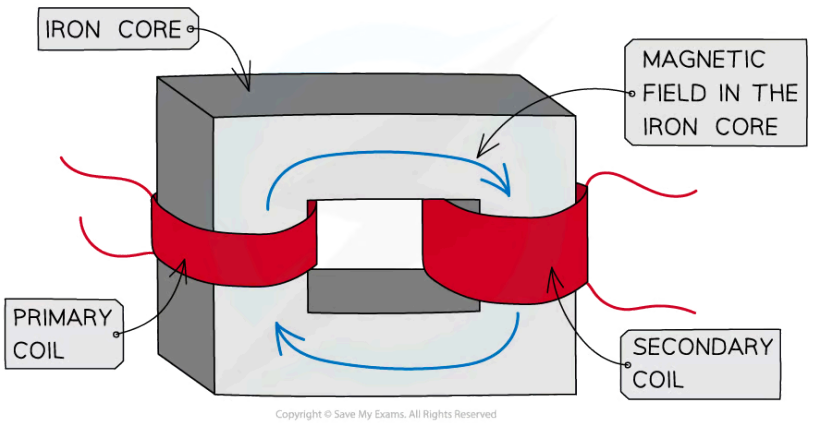

Coils are magnetically linked, through their combined magnetic flux linkage, using a soft iron core

- In the primary coil, an alternating current producing an alternating voltage is applied
  - This creates an **alternating magnetic field** inside the iron core and therefore a changing magnetic flux linkage
- A changing magnetic field passes through to the secondary coil through the iron core

- This results in a changing magnetic flux linkage in the secondary coil and from Faraday's Law, an **e.m.f is induced**
- An e.m.f produces an alternating output voltage from the secondary coil
- The output alternating voltage is at the **same** frequency as the input voltage

Your notes

Worked Example

When connected to a DC power supply, the primary coil of a transformer becomes an electromagnet.

Describe the changes which take place inside the secondary coil of a transformer when DC current in the primary coil is:

a) Switched on

b) Remains on

c) Switched off

Answer:

Part (a)

Step 1: Describe the creation of an electromagnet

- When current is switched on a magnetic field is produced around the primary coil

Step 2: Describe the change in magnetic flux linkage and induced e.m.f

- Magnetic flux is linked to the secondary coil
- Changing magnetic flux through the secondary coil induces an e.m.f in it
- This causes a current to flow (momentarily)

Part (b)

Step 1: Describe the non-change in magnetic flux linkage

- While the current in the primary coil remains on, there is no change in magnetic flux linkage through the secondary coil

Step 2: Describe the effect on induced e.m.f and current

- Therefore, the induced e.m.f (and therefore, the current in it) reduces to zero

Part (c)

Step 1: Describe the electromagnet 'switching off'

- When current is switched off the primary coil is no longer an electromagnet
- Therefore, the magnetic field around it vanishes

Step 2: Describe the change in magnetic flux linkage and induced e.m.f

- Magnetic flux is no longer linked to the secondary coil
- As the current switches off, changing magnetic flux through the secondary coil (as it reduces to zero) induces an e.m.f in **in the opposite direction** to part (a)
- A current (momentarily) flows in **in the opposite direction** to part (a)

© 2026 Save My Exams, Ltd.

Examiner Tips and Tricks

Explaining the link in e.m.f in both sets of coil in a transformer are very common exam questions. Make sure you've mentioned **every** point, including the words '**change**' in flux linkage and **induced** e.m.f. You must be specific with your terminology for full marks.

Your notes

Your notes

Lenz's Law

- Lenz's Law is used to predict the **direction** of an induced e.m.f in a coil or wire
- Lenz's Law is summarised below:

  The induced e.m.f is set up in a direction to produce effects that oppose the change causing it

Experimental Evidence for Lenz's Law

- To verify Lenz's Law, the only apparatus needed is:
  - A bar magnet
  - A coil of wire
  - A sensitive ammeter
- Note, a cell is **not** required

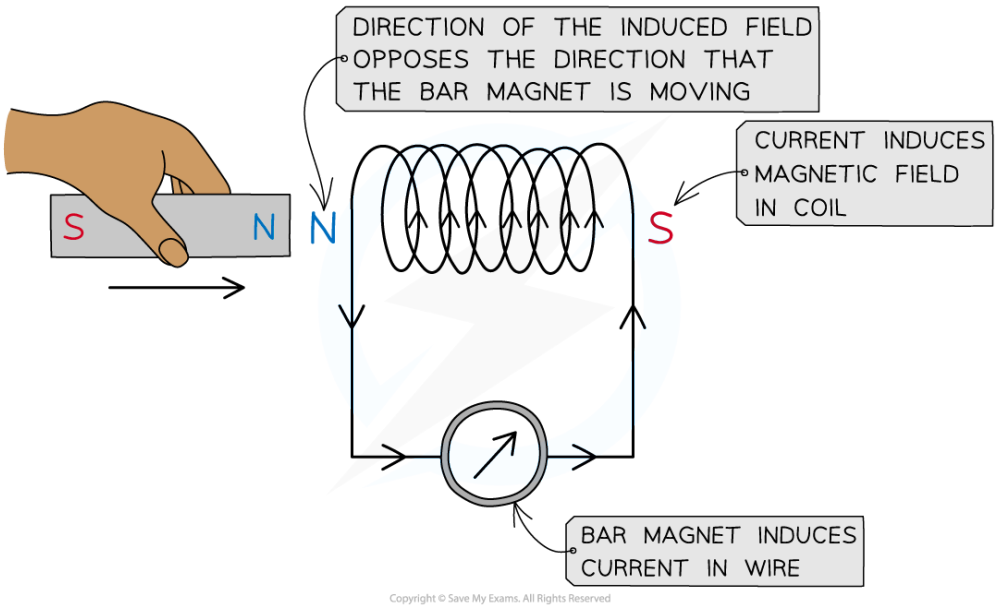

Lenz's law can be verified using a coil connected in series with a sensitive ammeter and a bar magnet

- A known pole (either north or south) of a bar magnet is pushed into the coil
  - This induces an e.m.f in the coil
  - The induced e.m.f drives a current (because it is a complete circuit)
- Lenz's Law dictates:

- The direction of the e.m.f, and hence the current, must be set up to **oppose** the incoming magnet
    - Since a **north pole** approaches the coil face, the e.m.f must be set up to create an induced **north pole**
    - This is because two north poles will **repel** each other
- The direction of the current is therefore as shown in the image above
    - The direction of current can be verified using the right hand grip rule
    - Fingers curl around the coil in the direction of current and the thumb points along the direction of the flux lines, from north to south
    - Therefore, the current flows in an anti-clockwise direction in the image shown, in order to induce a north pole opposing the incoming magnet
- Reversing the magnet direction would give an opposite deflection on the voltmeter
    - Lenz's Law now predicts a south pole induced at the coil entrance
    - This would **attract** the north pole attempting to leave
    - Therefore, the induced e.m.f **always** produces effects to oppose the changes causing it
- Lenz's Law is a direct consequence of the **principle of conservation of energy**
    - Electromagnetic effects will not create electrical energy out of nothing
    - In order to induce and sustain an e.m.f, for instance, **work** must be done in order to overcome the repulsive effect due to Lenz's Law

Your notes

Examiner Tips and Tricks

A typical exam question may ask you to explain the presence of the negative sign in Faraday's Law, which is the equation that tells you the size of the induced e.m.f ε as:

$$\varepsilon = -\frac{d(N\Phi)}{dt}$$

You should remember that the negative sign is representative of **Lenz's Law,** which says that the induced e.m.f ε is set up **to oppose the change causing it.** The 'change' causing an induced e.m.f, in this case, is the changing flux linkage (represented by the quantity $\frac{d(N\Phi)}{dt}$).

© 2026 Save My Exams, Ltd.

Your notes

Faraday's Law

- Faraday's Law connects the **rate** of change of flux linkage with induced e.m.f
- It is defined in words as:

The magnitude of the induced e.m.f is directly proportional to the rate of change of magnetic flux linkage

- Faraday's Law as an equation is defined as:

$$\varepsilon = \frac{\Delta(N\Phi)}{\Delta t}$$

- Where:
  - ε = induced e.m.f (V)
  - $\Delta(N\phi)$ = change in flux linkage (Wb turns)
  - Δt = time interval (s)
- If the interval of time becomes very small (i.e., in the limit of $\Delta t \rightarrow 0$) the equation for Faraday's Law can be written as:

$$\varepsilon = \frac{d(N\Phi)}{dt}$$

Combining Lenz's Law and Faraday's Law

- Combining Lenz's Law into the equation for Faraday's Law is written as:

$$\varepsilon = -\frac{d(N\Phi)}{dt}$$

- The **negative sign** represents Lenz's Law
  - This is because it shows the induced e.m.f ε is set up in an '**opposite direction**' to oppose the changing flux linkage
- This equation also shows that the **gradient** of the graph of magnetic flux (linkage) against time, $\frac{\Delta(N\Phi)}{\Delta t}$ represents the **magnitude** of the induced e.m.f
  - Note: the negative sign means if the gradient is **positive**, the induced e.m.f is **negative**
  - This is again due to Lenz's Law, which says the e.m.f. is set up to **oppose** the effects of the changing flux linkage

© 2026 Save My Exams, Ltd.

Your notes

Worked Example

A small rectangular coil contains 350 turns of wire. The longer sides are 3.5 cm and the shorter sides are 1.4 cm.

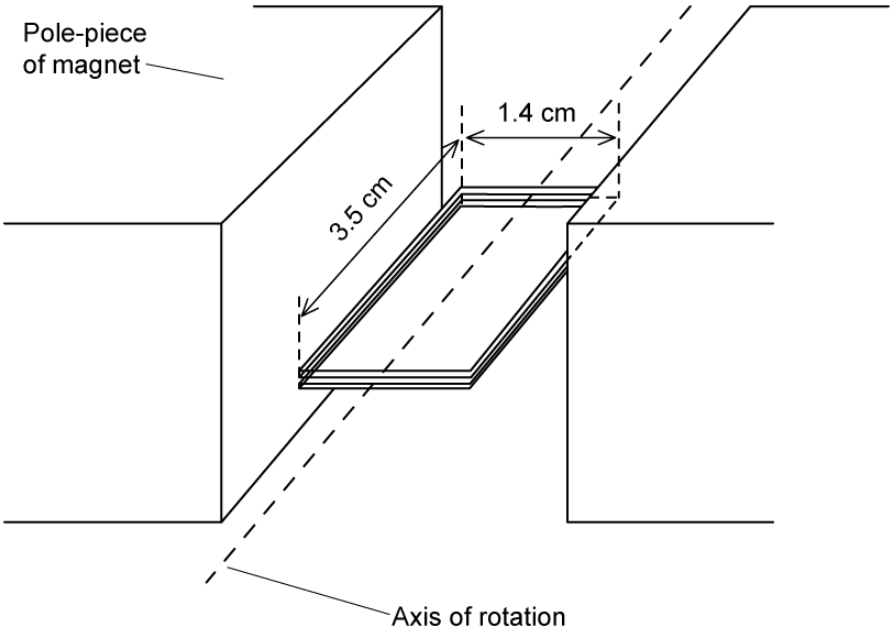

The coil is held between the poles of a large magnet so that it can rotate about an axis through its centre.

The magnet produces a uniform magnetic field of flux density 80 mT between its poles. The coil is positioned horizontally and then turned through an angle of 90° in a time of 0.18 s.

Calculate the magnitude of the average e.m.f induced in the coil.

Answer:

Step 1: Write down the known quantities

- Magnetic flux density, $B = 80\ \text{mT} = 80 \times 10^{-3}\ \text{T}$
- Area, $A = 3.5 \times 1.4 = (3.5 \times 10^{-2}) \times (1.4 \times 10^{-2}) = 4.9 \times 10^{-4}\ \text{m}^2$
- Number of turns, $N = 350$
- Time interval, $\Delta t = 0.18\ \text{s}$

Step 2: Write out the equation for Faraday's law:

$$\varepsilon = \frac{\Delta(N\Phi)}{\Delta t}$$

Step 3: Write out the equation for the change in flux linkage:

- The number of turns N and the coil area A stay constant

© 2026 Save My Exams, Ltd.

- The flux through the coil changes as it rotates
- Therefore, the change in flux linkage can be written as:

$$\Delta(N\Phi) = NA(\Delta B)$$

Step 4: Determine the change in magnetic flux linkage

- The initial flux through the coil is zero (flux lines are parallel to the coil face)
- The final flux through the coil is 80 mT (flux lines are perpendicular to the coil face)
- This is because the coil begins horizontally in the field and is rotated 90°
- Therefore, the change in flux linkage is:

$$\Delta(N\Phi) = 350 \times (4.9 \times 10^{-4}) \times (80 \times 10^{-3}) = 0.014 \text{ Wb turns}$$

Step 5: Substitute change in flux linkage and time into Faraday's law equation:

$$\varepsilon = \frac{0.014}{0.18} = 0.076 \text{ V}$$

Your notes

Examiner Tips and Tricks

The 'magnitude' of the e.m.f. just means it's **size**, rather than its direction. This is often what is required in exam questions, so the minus sign in Lenz's law is not necessarily required in calculations. However, you may be expected to explain the significance of the negative sign in the equation, so be prepared to interpret it as an expression of Lenz's Law!

Remember that 'd' and the greek letter delta, 'Δ', simply mean 'change in'.

Your notes

Alternating Currents & Potential Differences

- An alternating current (a.c) is defined as:

  A current which periodically varies between a positive and negative value

- This means the direction of an alternating current switches every **half cycle**
- The variation of current, or p.d., with time can be described as a sine curve ie. **sinusoidal**
  - Therefore, the electrons in a wire carrying a.c. move back and forth with simple harmonic motion
- As with SHM, the relationship between time period *T* and frequency *f* for a.c is related by the equation:

$$T = \frac{1}{f}$$

- Where:
  - *T* = time period (s)
  - *f* = frequency (Hz)
- Peak current (I_0), or peak voltage (V_0), is defined as:

  The maximum value of the alternating current or voltage

- Peak current, or voltage, can be determined from the **amplitude** of a current-time or voltage-time graph
- The **peak-to-peak** current or voltage is the distance between a positive and consecutive negative peak. This means:

$$\textbf{peak voltage } V_0 = \textbf{peak-to-peak voltage} \div 2$$

© 2026 Save My Exams, Ltd.

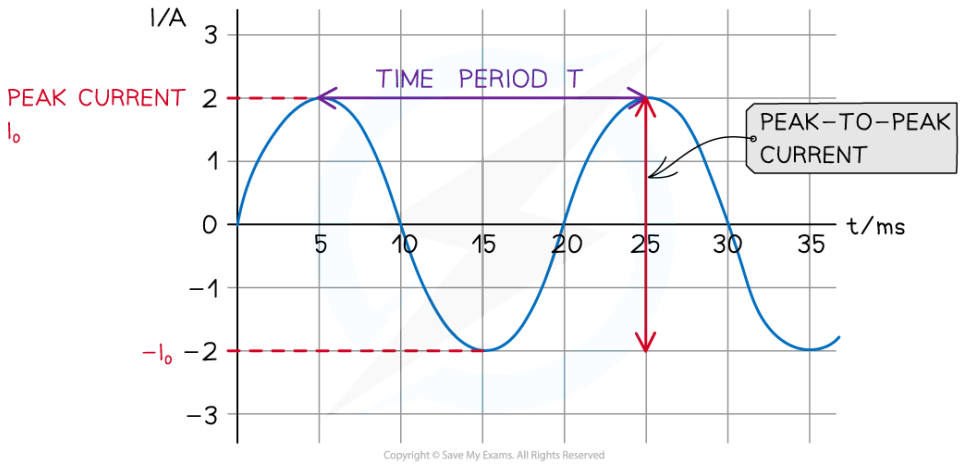

Graph of alternating current against time showing the time period, peak current and peak-to-peak current

Root-Mean-Square Current & Voltage

- Root-mean-square (rms) values of current, or voltage, are a useful way of **comparing** a.c current, or voltage, to its equivalent direct current (d.c), or voltage
- The rms values represent the direct current, or voltage, values that will produce the same **heating effect**, or power dissipation, as the alternating current, or voltage
- The **rms** value of an **alternating current** is defined as:

  The equivalent direct current that produces the same power
- In other words, an rms current is 'equivalent', in a sense, to a DC current, because they produce the same overall effect in a circuit
- The rms value of an alternating voltage is similarly defined as:

  The equivalent dc voltage that produces the same power
- Rms current is equal to $0.707 \times I_0$, which is about 70% of the peak current I_0
  - This is also the case for rms voltage

Your notes

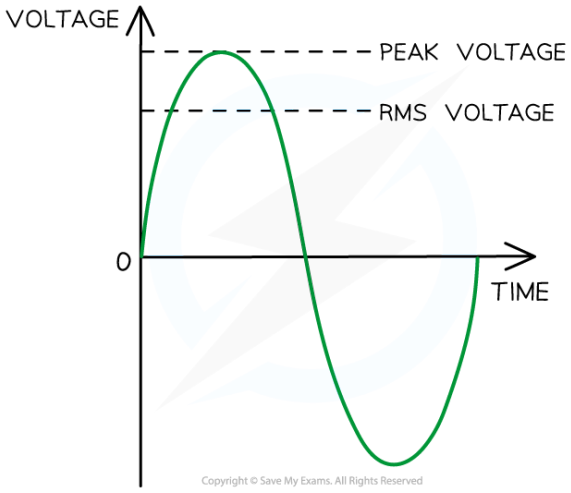

V_{rms} and peak voltage. The rms voltage is about 70% of the peak voltage

Your notes

Worked Example

The variation with time *t* of the output voltage *V* of an alternating voltage supply is shown in the graph below.

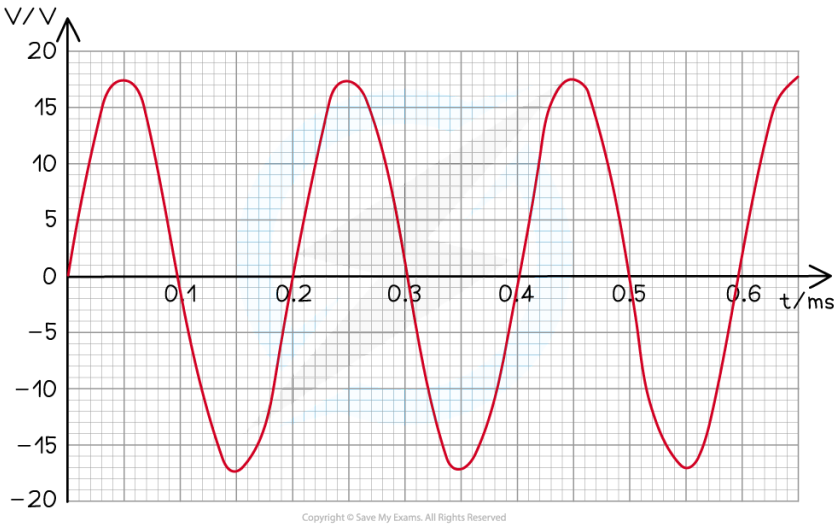

Use the graph to calculate the frequency of the supply and the peak voltage.

Answer:

Your notes

Step 1: Write down the period-frequency relation

$$T = \frac{1}{f}$$

Step 2: Rearrange for frequency

$$f = \frac{1}{T}$$

Step 3: Calculate the time period from the graph

The time period is the time taken for one complete cycle

From the graph this is equal to 0.2 ms

Therefore, the time period, $T = 0.2 \text{ ms} = 0.2 \times 10^{-3} \text{ s}$

Step 4: Substitute the time period into the frequency equation

$$f = \frac{1}{0.2 \times 10^{-3}} = 5000 \text{ Hz} = \mathbf{5\ kHz}$$

Step 5: Determine the peak voltage from the graph

The peak voltage from the graph is the maximum voltage = **17.5 V**

Examiner Tips and Tricks

Remember to double-check the units on the alternating current and voltage graphs. These are often shown in milliseconds (ms) instead of seconds (s) on the x-axis.

© 2026 Save My Exams, Ltd.

Your notes

Root-Mean-Square Current & Potential Difference

- The root-mean-square (rms) current I_{rms} is defined by the equation:

$$I_{rms} = \frac{I_0}{\sqrt{2}}$$

- Where:
  - I_0 = peak current (A)
- The rms voltage V_{rms} is defined by the equation:

$$V_{rms} = \frac{V_0}{\sqrt{2}}$$

- Where:
  - V_0 = peak voltage (V)
- Rms current is equal to **0.707I_0**, which is about **70%** of the peak current I_0
  - This is also the case for rms voltage

Worked Example

An electric oven is connected to a 230 V root mean square (rms) mains supply using a cable of negligible resistance.

Calculate the peak-to-peak voltage of the mains supply.

Answer:

Step 1: Write down the V_{rms} equation

$$V_{rms} = \frac{V_0}{\sqrt{2}}$$

Step 2: Rearrange for the peak voltage, V_0

© 2026 Save My Exams, Ltd.

$$V_0 = \sqrt{2} \times V_{rms}$$

Step 3: Substitute in the values

$$V_0 = \sqrt{2} \times 230$$

Step 4: Calculate the peak-to-peak voltage

- The peak-to-peak voltage is the peak voltage (V_0) × 2
  Peak-to-peak voltage = (√2 × 230) × 2 = 650.538 = **651 V (3 s.f)**

Your notes

Examiner Tips and Tricks

You are expected to know how to apply these equations, which simply relate the peak current or voltage of an AC circuit to its rms value.

Remember, the rms value in an AC circuit is **equivalent to values of current and voltage that would produce the same heating effect in DC circuits**. This means, you can use the rms values in AC circuits for equivalent calculations involving DC circuits.